NOTES: UNLESS OTHERWISE SPECIFIED

| REVISION HISTORY | | | |
|---|---|---|---|
| REV | DESCRIPTION | APPROVED | DATE |
| - | Initial release | J Taylor | 2026/11/01 |

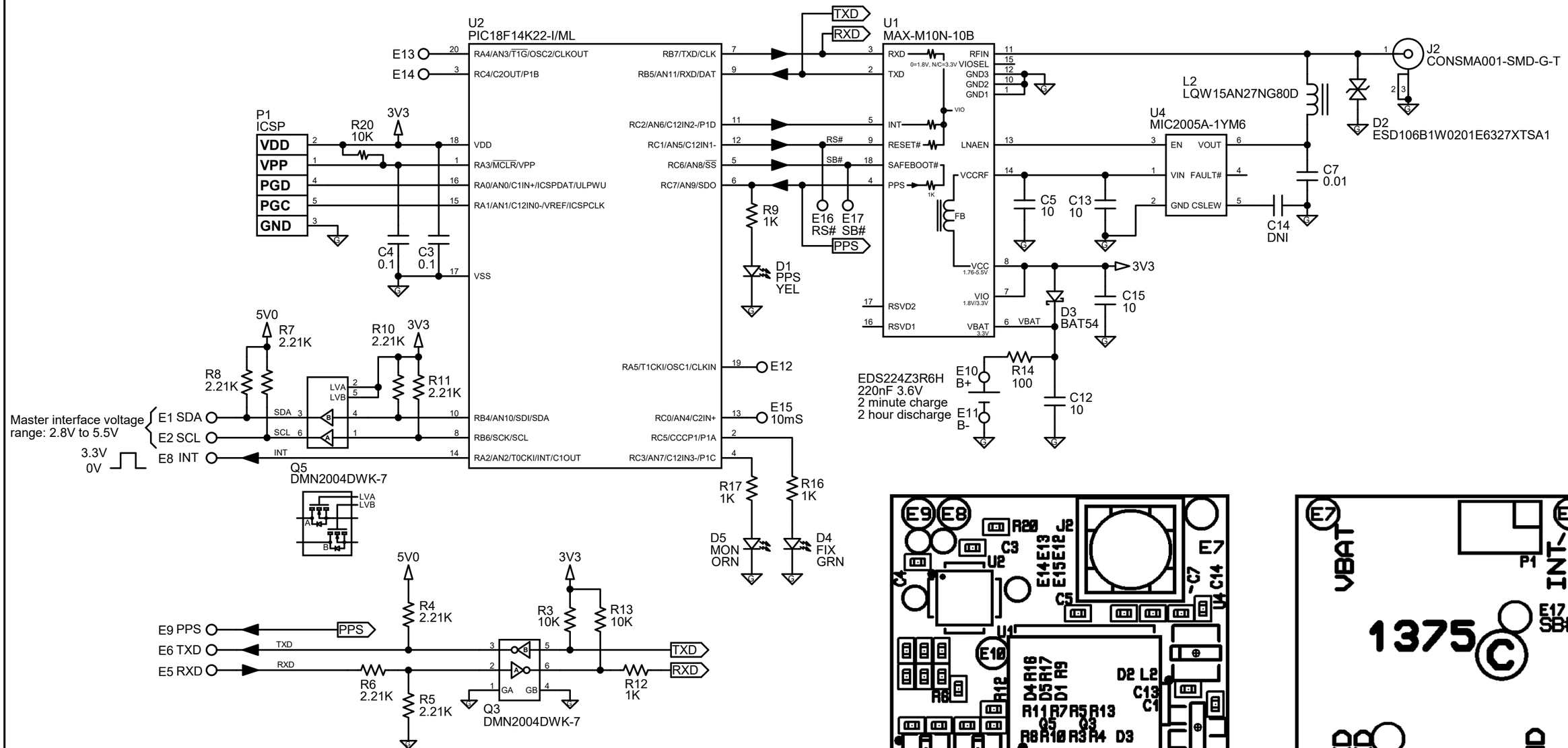








| APPROVALS | DATE | TITLE |
|---|---|---|
| DRAWN J TAYLOR | 2026/11/01 | SmartNixie GPS Real Time Clock |
| CHECKED | | |
| ENGINEER | | |
| PROJ ENGINEER | | |
| APPROVED | | |
| QA | | |

| SIZE | FSCM NO. | DRAWING NO. | REV. |
|---|---|---|---|
| B | | 1375 | C |

| SCALE | | MODIFIED: | SHEET |
|---|---|---|---|
| NONE | © 2026 TES | 11/20/2026 8:56:34 AM | 1 OF 1 |